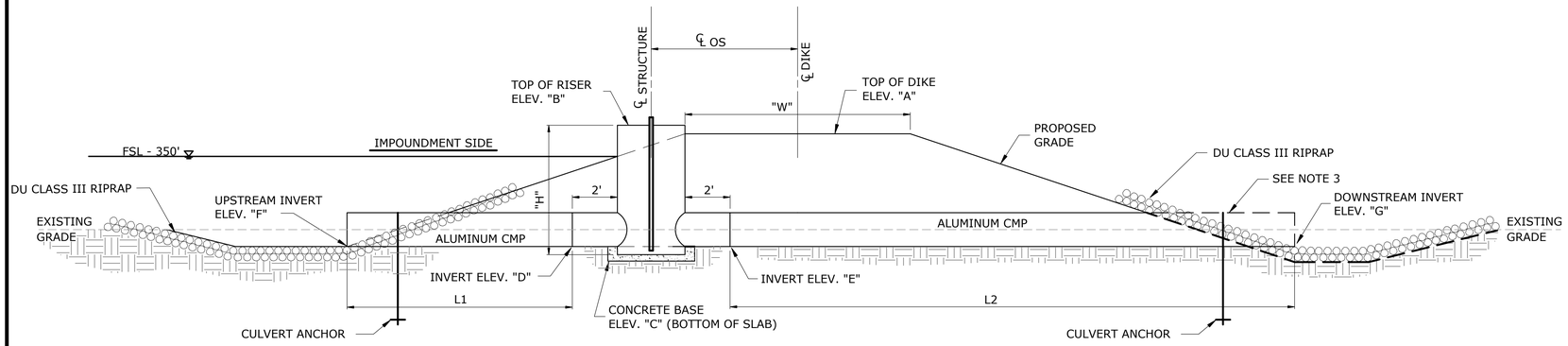


## PROFILE OF ALUMINUM CMP WATER CONTROL STRUCTURE

NOT TO SCALE

| STRUCTURE | PIPE SIZE | PIPE GA. | RISER SIZE | RISER GA. | TOP OF DIKE EL. "A" | TOP OF RISER EL. "B" | CONCRETE BASE EL "C" | INLET I.E. EL. "D" | OUTLET I.E. EL. "E" | UPSTREAM INV. "F" | DOWNSTREAM INV. "G" | TOP WIDTH "W" | INLET LENGTH "L1" | OUTLET LENGTH "L2" | ℄ - L C OFFSET | RISER HEIGHT "H" | NO. OF STOPLOGS |
|---|---|---|---|---|---|---|---|---|---|---|---|---|---|---|---|---|---|
| WCS 1 | 18" | 12 | 24" | 12 | 365.0' | 365.0' | 359.75' | 360.75' | 360.75 | 361.75 | 360.65 | 12' | 20' | 35' | 7' | 4.75' | 10 |
| WCS 2 | 18" | 12 | 24" | 12 | 362.0' | 362.0' | 357.25' | 358.25 | 358.25 | 358.25 | 358.15 | 12' | 20' | 30' | 7' | 4.25' | 9 |
| WCS 3 | 18" | 12 | 24" | 12 | 362.0' | 362.0' | 357.25' | 358.25 | 358.25 | 358.25 | 358.15 | 12' | 20' | 30' | 7' | 4.25' | 9 |

UPDATE TO SPECIFIC PROJECT

NOTES:
1. "H" INCLUDES 0.5' RISE EMBEDDED IN CONCRETE.
2. ALL METAL PIPE SHALL BE CONNECTED WITH FLANGE COUPLERS.
3. DOWNSTREAM PIPE OUTLET SHALL CONFORM TO SLOPE FOR PIPE DIAMETERS 30" AND LARGER.
4. INLET AND/OR OUTLET PIPES GREATER THAN 20 L.F. SHALL BE CONNECTED W/ FLANGE COUPLERS. A FULL 20' SECTION MUST BE UTILIZED AS THE END SECTION OF PIPE.
5. CONTRACTOR SHALL FIELD CHECK ALL EXISTING ELEVATIONS PRIOR TO CONSTRUCTION AND MAKE ADJUSTMENTS, IF NEEDED.

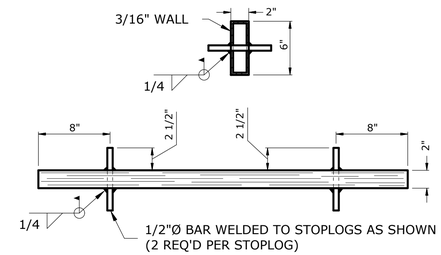


NOTE: 1. WELD 1/2Ø BAR IN STOPLOGS.
2. STOPLOGS SHALL BE 1" SHORTER THAN WIDTH BETWEEN STOPLOG GUIDES.
3. FABRICATOR TO PROVIDE 1-2" & 1-3" STOPLOG IN ADDITION TO STOPLOGS SPECIFIED.

## ALUMINUM STOPLOG DETAIL

NOT TO SCALE

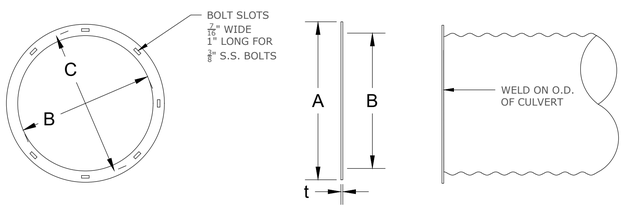


| BASIC SIZE IN. | ALUM. | O.D. (A) FLANGE | I.D. (B) FLANGE | NO. HOLES | BOLT CIR. DIA. (C) | GASKET NO SECT |
|---|---|---|---|---|---|---|
| 6 | 3/16 | 10 | 6 | 6 | 8 | 1 |
| 8 | 3/16 | 12 | 8 | 6 | 10 | 1 |
| 12 | 3/16 | 16 | 12 | 10 | 14 | 1 |
| 15 | 3/16 | 19 | 15 | 12 | 17 | 1 |
| 18 | 3/16 | 22 | 18 | 14 | 20 | 1 |
| 21 | 3/16 | 25 | 21 | 16 | 23 | 1 |
| 24 | 3/16 | 28 | 24 | 18 | 26 | 1 |
| 30 | 3/16 | 34 | 30 | 22 | 32 | 2 |
| 36 | 3/16 | 40 | 36 | 26 | 38 | 2 |
| 42 | 1/4 | 46 | 42 | 30 | 44 | 2 |
| 48 | 1/4 | 52 | 48 | 34 | 50 | 2 |

NOTES: 1. 6"- 36" FLANGES CUT FROM 3/16 ALUMINUM PLATE.
2. GASKETS DIE CUT FROM 1/8" PVC NITRILE FOAM ENSOLITE AND MATCHED TO CORRESPONDING FLANGE DIMENSIONS (BXD)(E) & NO HOLES.
3. 2 WASHERS PER SLOT.

## FLANGE COUPLER DETAIL

NOT TO SCALE

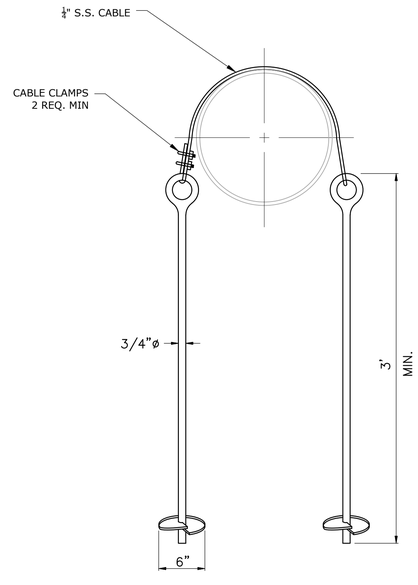


## CULVERT ANCHOR

NOT TO SCALE

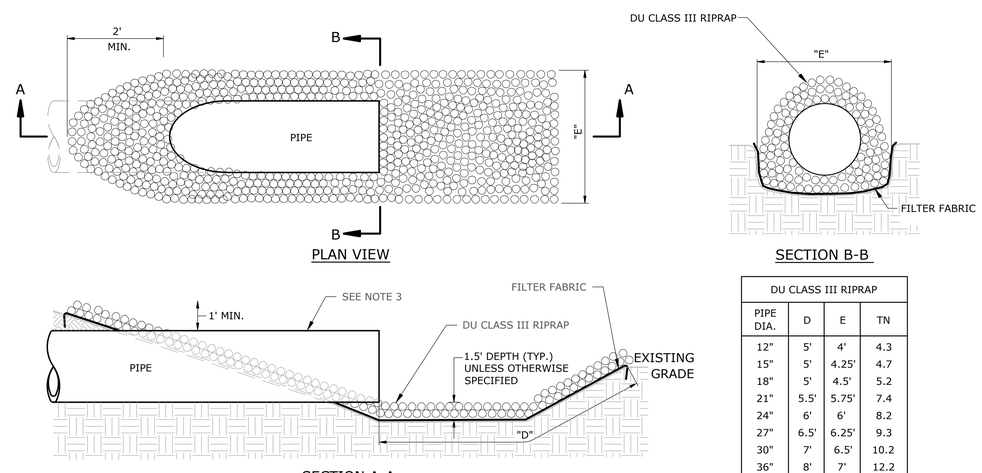


| DU CLASS III RIPRAP | | | |
|---|---|---|---|
| PIPE DIA. | D | E | TN |
| 12" | 5' | 4' | 4.3 |
| 15" | 5' | 4.25' | 4.7 |
| 18" | 5' | 4.5' | 5.2 |
| 21" | 5.5' | 5.75' | 7.4 |
| 24" | 6' | 6' | 8.2 |
| 27" | 6.5' | 6.25' | 9.3 |
| 30" | 7' | 6.5' | 10.2 |
| 36" | 8' | 7' | 12.2 |
| 42" | 9' | 7.5' | 14.3 |
| 48" | 10' | 8' | 16.5 |
| 54" | 12' | 8.5' | 19.8 |
| 60" | 12.5' | 9' | 21.8 |

NOTES:
1. IF THE RIPRAP CLASS DESIGNATION IS NOT SPECIFIED ON THE CONSTRUCTION PLANS, CLASS 1 ROCK RIPRAP SHALL BE UTILIZED. THE ROCK SHALL BE APPROVED BY THE ENGINEER PRIOR TO INSTALLATION.
2. UNLESS OTHERWISE SPECIFIED, FILTER FABRIC SHALL BE UTILIZED IN THE INSTALLATION OF RIPRAP.
3. DOWNSTREAM CMP PIPE OUTLET SHALL CONFORM TO SLOPE FOR PIPE DIAMETERS 30" AND LARGER.

## OUTLET AND RIPRAP DETAIL

NOT TO SCALE


DUCKS UNLIMITED
GREAT LAKES/ATLANTIC REGIONAL OFFICE
7322 NEWMAN BOULEVARD, BUILDING 1
DEXTER, MICHIGAN 48130
(734) 623-2000
www.ducks.org


AFFIX SEAL: DUCKS UNLIMITED, INC.
ON:

DU ALUM. FULL ROUND WATER CONTROL STRUCTURE

| Revision | Sheet | Revisions | Date | By |
|---|---|---|---|---|
| . | . | . | . | . |
| . | . | . | . | . |
| . | . | . | . | . |
| . | . | . | . | . |
| . | . | . | . | . |
| . | . | . | . | . |

CAD FILE: Full Round WCS Details
DESIGNED BY: RC
DRAWN BY: BK
SURVEYED BY: RC & BK
BIOLOGIST: DC
DATE: 03/08/2022
PROJECT NUMBER: ###########



NOT FOR CONSTRUCTION


NOTICE: CONSTRUCTION SITE SAFETY IS THE SOLE RESPONSIBILITY OF THE CONTRACTOR. DUCKS UNLIMITED, INC. SHALL NOT ASSUME ANY RESPONSIBILITY FOR THE SAFETY OF THE WORK PERFORMED, PERSONS ENGAGED IN THE WORK, NEARBY STRUCTURES, OR OF OTHER PERSONS ON-SITE. THIS MATERIAL, DATA AND INFORMATION IS THE PROPERTY OF DUCKS UNLIMITED, INC. IT MAY NOT BE USED OR REPRODUCED FOR ANY PURPOSE WITHOUT THE PRIOR WRITTEN CONSENT OF AN AUTHORIZED AGENT OF DUCKS UNLIMITED, INC. DUCKS UNLIMITED, INC. MAKES NO REPRESENTATION OR WARRANTY OF ANY KIND REGARDING THIS MATERIAL, DATA AND INFORMATION, INCLUDING, BUT NOT LIMITED TO, THE ACCURACY OF THE MATERIAL, DATA AND INFORMATION OR ITS SUITABILITY FOR ANY PURPOSE. ALL USE OF THE MATERIAL, DATA AND INFORMATION IS AT THE USERS SOLE RISK. BY USING ANY OF THIS MATERIAL, DATA AND INFORMATION, USER AGREES THAT DUCKS UNLIMITED, INC. IS NOT RESPONSIBLE FOR THEIR USE OF THE MATERIAL, DATA AND INFORMATION OR THE RESULTS THEREOF.
IT IS VIOLATION OF LAW FOR ANY PERSON, UNLESS THEY ARE ACTING UNDER THE DIRECTION OF A LICENSED PROFESSIONAL ENGINEER, ARCHITECT, LANDSCAPE ARCHITECT OR LAND SURVEYOR, TO ALTER AN ITEM IN ANY WAY. IF AN ITEM BEARING THE STAMP OF A LICENSED PROFESSIONAL IS ALTERED, THE ALTERING ENGINEER, ARCHITECT, LANDSCAPE ARCHITECT OR LAND SURVEYOR SHALL STAMP THE DOCUMENT AND INCLUDE THE NOTATION "ALTERED BY" FOLLOWED BY THEIR SIGNATURE, THE DATE OF SUCH ALTERATION, AND A SPECIFIC DESCRIPTION OF THE ALTERATION.


K:\GLARO C3D Projects\C3D DETAILS\Full Round WCS Details.dwg, 11/4/2024 2:39 PM, Bradley Kollmann, WCS - 1, None

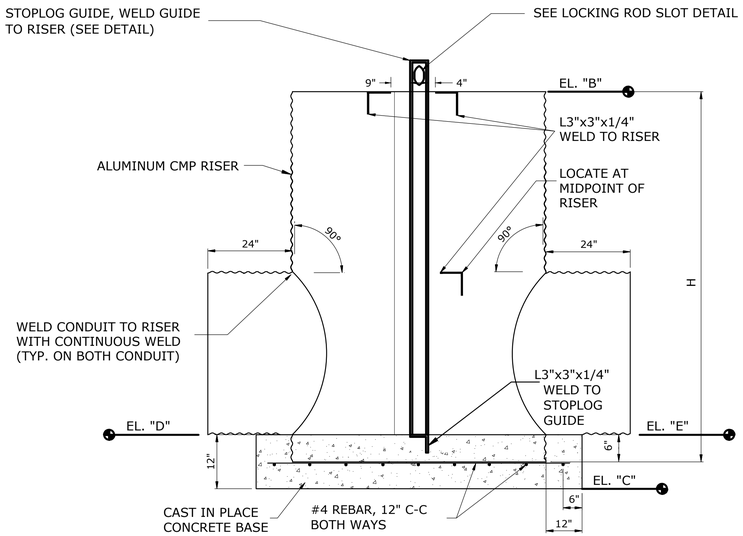


* SEE TABLE

## TYP CMP GATE CONTROL STRUCTURE

NOT TO SCALE

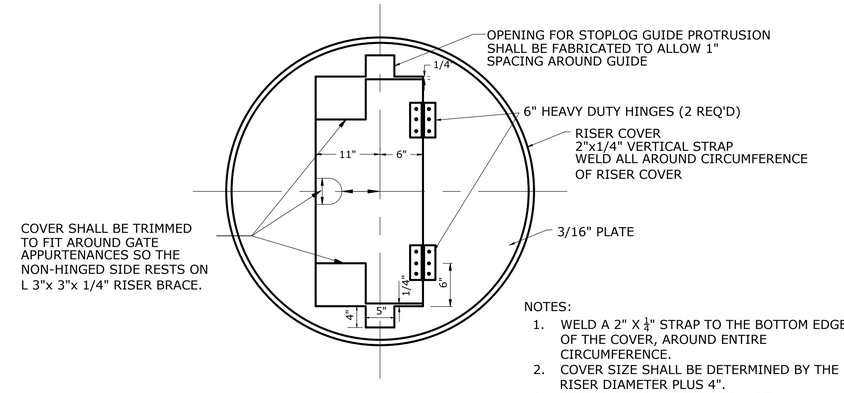


NOTES:

1. WELD A 2" X $\frac{1}{4}$" STRAP TO THE BOTTOM EDGE OF THE COVER, AROUND ENTIRE CIRCUMFERENCE.
2. COVER SIZE SHALL BE DETERMINED BY THE RISER DIAMETER PLUS 4".
3. HINGED DOOR LENGTH SHALL BE DETERMINED BY THE RISER DIAMETER MINUS 5" SIDE OF RISER.

## GATE RISER COVER DETAIL

NOT TO SCALE

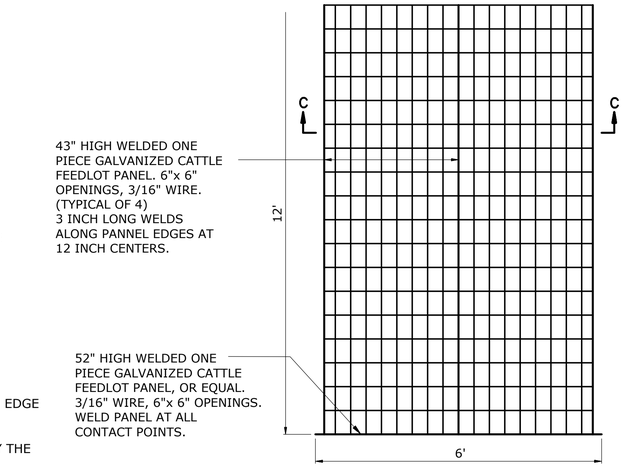


*APPLIES TO ALL WATER CONTROL STRUCTURES

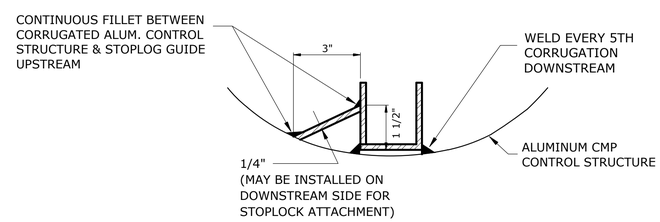


## STOPLOG GUIDE DETAIL

NOT TO SCALE

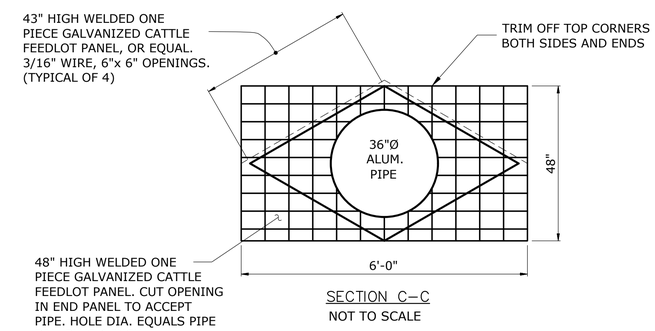


SECTION C–C

NOT TO SCALE

## BEAVER DETERRENT DETAIL

NOT TO SCALE

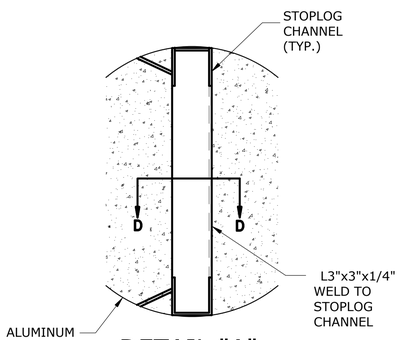


## DETAIL "A"

NOT TO SCALE

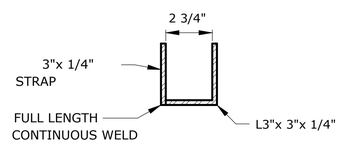


## STOPLOG CHANNEL DETAIL

NOT TO SCALE

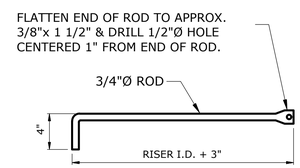


## LOCKING ROD DETAIL

NOT TO SCALE

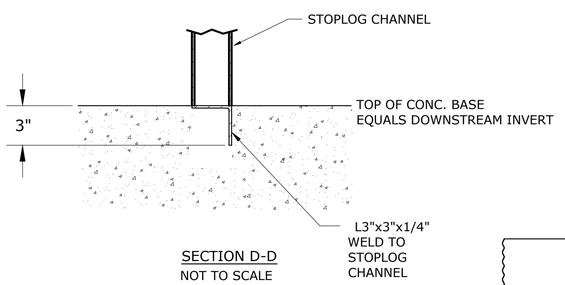


SECTION D-D

NOT TO SCALE

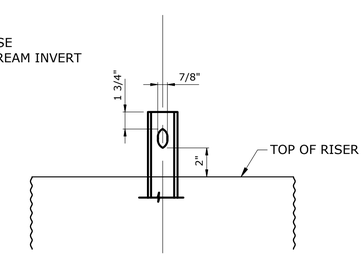


## LOCKING ROD SLOT DETAIL

NOT TO SCALE

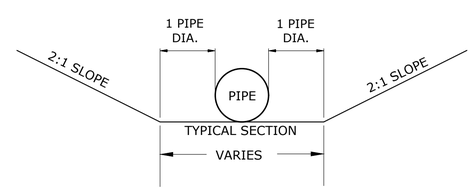


## PIPE INSTALLATION & REMOVAL DETAIL

NOT TO SCALE

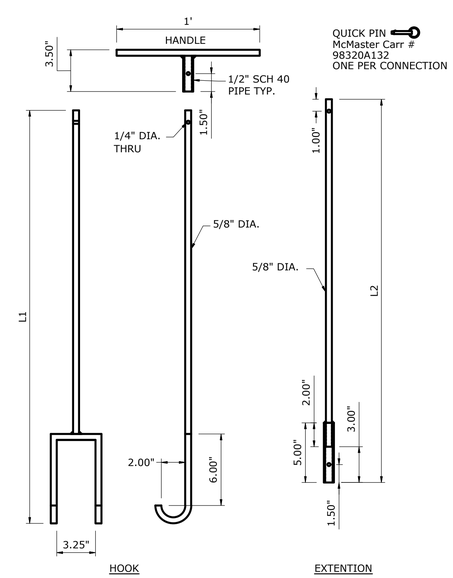


## STOPLOG LIFTING HOOK DETAIL

NOT TO SCALE

NOTE: L1 AND L2 EQUAL HEIGHT OF RISER PLUS 1'
MAX LENGTH FOR EACH 5'. AFTER ADD A SECOND EXTENTION L3
2 PER STRUCTURE

NOTICE: CONSTRUCTION SITE SAFETY IS THE SOLE RESPONSIBILITY OF THE CONTRACTOR. DUCKS UNLIMITED, INC. SHALL NOT ASSUME ANY RESPONSIBILITY FOR THE SAFETY OF THE WORK PERFORMED, PERSONS ENGAGED IN THE WORK, NEARBY STRUCTURES, OR OF OTHER PERSONS ON-SITE. THIS DRAWING, DATA AND INFORMATION IS THE PROPERTY OF DUCKS UNLIMITED, INC. IT MAY NOT BE USED OR REPRODUCED FOR ANY PURPOSE WITHOUT THE PRIOR WRITTEN CONSENT OF AN AUTHORIZED AGENT OF DUCKS UNLIMITED, INC. DUCKS UNLIMITED, INC. MAKES NO REPRESENTATION OR WARRANTY OF ANY KIND REGARDING THIS DRAWING, DATA AND INFORMATION, INCLUDING, BUT NOT LIMITED TO, THE ACCURACY OF THE DRAWING, DATA AND INFORMATION OR ITS SUITABILITY FOR ANY PURPOSE. ALL USE OF THE DRAWING, DATA AND INFORMATION IS AT THE USERS SOLE RISK. BY USING ANY OF THIS MATERIAL, DATA AND INFORMATION, USER AGREES THAT DUCKS UNLIMITED, INC. IS NOT RESPONSIBLE FOR THEIR USE OF THE MATERIAL, DATA AND INFORMATION OR THE RESULTS THEREOF. IF THIS DRAWING IS ALTERED, THE ALTERING ENGINEER, ARCHITECT, LANDSCAPE ARCHITECT OR LAND SURVEYOR SHALL STAMP THE DOCUMENT AND INCLUDE THE NOTATION "ALTERED BY" FOLLOWED BY THEIR SIGNATURE, THE DATE OF SUCH ALTERATION, AND A SPECIFIC DESCRIPTION OF THE ALTERATION.

K:\GLARO C3D Projects\C3D DETAILS\Full Round WCS Details.dwg, 11/4/2024 2:31 PM, Bradley Kollmann, WCS - 2, None

DUCKS UNLIMITED
GREAT LAKES/ATLANTIC REGIONAL OFFICE
7322 NEWMAN BOULEVARD, BUILDING 1
DEXTER, MICHIGAN 48130
(734) 623-2000
www.ducks.org

AFFIX SEAL: DUCKS UNLIMITED, INC.
ON:

DU ALUM. FULL ROUND WATER CONTROL STRUCTURE

| Revision | Sheet | Revisions | Date | By |
|---|---|---|---|---|
| - | - | - | - | - |
| - | - | - | - | - |
| - | - | - | - | - |
| - | - | - | - | - |
| - | - | - | - | - |
| - | - | - | - | - |

CAD FILE: Full Round WCS Details
DESIGNED BY: RC
DRAWN BY: BK
SURVEYED BY: RC & BK
BIOLOGIST: DC
DATE: 03/08/2022
PROJECT NUMBER: US-IN-125-3



NOT FOR CONSTRUCTION

# Gilead Slough Quantities
## Minimum Alternative

Computed by Yadier Acosta
Checked by Name (Date)

Insert
Total
Update

Inputs:

| | | |
|---|---|---|
| WCS Concrete Base Thickness | 1 | ft |
| WCS Concrete Base Length | 8 | ft |
| WCS Concrete Base Width | 4 | ft |

| | | |
|---|---|---|
| Pump Concrete Slab Thickness | 1.5 | ft |
| Pump Concrete Slab Length | 15 | ft |
| Pump Concrete Slab Width | 15 | ft |
| Pump Concrete Piles Radius | 1 | ft |
| Pump Concrete Piles Length | 20 | ft |

| | | |
|---|---|---|
| Aluminum Pipe Culvert (WCS) Length | 150 | ft |

| | | |
|---|---|---|
| Geotextile Length | 14 | ft |
| Geotextile Width | 6 | ft |

| | | |
|---|---|---|
| Riprap Thickness | 1.5 | ft |
| Riprap Length | 14 | ft |
| Riprap Width | 6 | ft |

| | | |
|---|---|---|
| Stoplogs Width | 0.5 | ft |

Elements Quantities:

| | | | | |
|---|---|---|---|---|
| Cast In Place Reinforce Concrete (WCS): | 32 | $ft^3$ | 1.185185 | $yd^3$ |
| | | | | |
| Concrete Base | 32 | $ft^3$ | 1.185185 | $yd^3$ |

| | | | | |
|---|---|---|---|---|
| Cast In Place Reinforce Concrete (Pump Slab): | 400.3319 | $ft^3$ | 14.82711 | $yd^3$ |
| Pump Slab | 337.5 | $ft^3$ | 12.5 | $yd^3$ |
| Piles for Pump Slab | 62.83185 | $ft^3$ | 2.327106 | $yd^3$ |

| | | | | |
|---|---|---|---|---|
| Aluminum Pipe Culvert (WCS): | 150.00 | ft | | |

| | | | | |
|---|---|---|---|---|
| Geotextile | 168 | $ft^2$ | | |

| | | | | |
|---|---|---|---|---|
| DU Class IV Riprap (WCS): | 252 | $ft^3$ | 16.4 | tn |

| | | | | |
|---|---|---|---|---|
| Stoplogs (WCS): | 24 | Unit | | |

---

| Intermediate Option Final Quantities: Three WCS | | | | |
|---|---|---|---|---|
| Cast In Place Reinforce Concrete: | 96 | $ft^3$ | 3.555556 | $yd^3$ |
| Aluminum Pipe 20"(WCS): | 450 | ft | | |
| Geotextile | 504 | $ft^2$ | | |
| DU Class IV Riprap | 756 | $ft^3$ | 49.2 | tn |
| Stoplogs | 72 | Unit | | |

*Quantities reflect the totals for 3 WCS at Gilead (Upper, MIddle, Lower) MSUs

Comment:

| Referece Drawings | Calculated |
|---|---|
| 8.2 tn | 8.6625 tn |

# Gilead Slough Quantities
## Maximum Alternative

Computed by Yadier Acosta
Checked by Name (Date)

Insert
Total
Update

Inputs:

| | | |
|---|---|---|
| WCS Concrete Base Thickness | 1 | ft |
| WCS Concrete Base Length | 8 | ft |
| WCS Concrete Base Width | 4 | ft |

| | | |
|---|---|---|
| Pump Concrete Slab Thickness | 1.5 | ft |
| Pump Concrete Slab Length | 15 | ft |
| Pump Concrete Slab Width | 15 | ft |
| Pump Concrete Piles Radius | 1 | ft |
| Pump Concrete Piles Length | 20 | ft |

| | | |
|---|---|---|
| Aluminum Pipe Culvert (WCS) Length | 150 | ft |

| | | |
|---|---|---|
| Geotextile Length | 14 | ft |
| Geotextile Width | 6 | ft |

| | | |
|---|---|---|
| Riprap Thickness | 1.5 | ft |
| Riprap Length | 14 | ft |
| Riprap Width | 6 | ft |

| | | |
|---|---|---|
| Stoplogs Width | 0.5 | ft |

Elements Quantities:

| | | | | |
|---|---|---|---|---|
| Cast In Place Reinforce Concrete (WCS): | 32 | $ft^3$ | 1.185185 | $yd^3$ |
| | | | | |
| Concrete Base | 32 | $ft^3$ | 1.185185 | $yd^3$ |

| | | | | |
|---|---|---|---|---|
| Cast In Place Reinforce Concrete (Pump Slab): | 400.3319 | $ft^3$ | 14.82711 | $yd^3$ |
| Pump Slab | 337.5 | $ft^3$ | 12.5 | $yd^3$ |
| Piles for Pump Slab | 62.83185 | $ft^3$ | 2.327106 | $yd^3$ |

| | | | | |
|---|---|---|---|---|
| Aluminum Pipe Culvert (WCS): | 150.00 | ft | | |

| | | | | |
|---|---|---|---|---|
| Geotextile | 168 | $ft^2$ | | |

| | | | | |
|---|---|---|---|---|
| DU Class IV Riprap (WCS): | 252 | $ft^3$ | 16.4 | tn |

| | | | | |
|---|---|---|---|---|
| Stoplogs (WCS): | 24 | Unit | | |

---

| Maximum Option Final Quantities: Three WCS | | | | |
|---|---|---|---|---|
| Cast In Place Reinforce Concrete: | 496.3319 | $ft^3$ | 18.38266 | $yd^3$ |
| Aluminum Pipe 20"(WCS): | 450 | ft | | |
| Geotextile | 504 | $ft^2$ | | |
| DU Class IV Riprap | 756 | $ft^3$ | 49.2 | tn |
| Stoplogs | 72 | Unit | | |

*Quantities reflect the totals for 3 WCS at Gilead (Upper, Middle, Lower) MSUs

Comment:

| Referece Drawings | Calculated |
|---|---|
| 8.2 tn | 8.6625 tn |